MPE120 PCB Connector, Header (wave soldering)

DECA

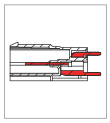
MPE120-762

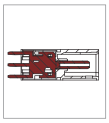
MPE120-016

DIMENSIONS/POSITIONS		MPE120-762	MPE120-016
間距	Pitch	7.62mm	10.16mm
位數	Poles	2 ~ 12Poles	2 ~ 8Poles
塑膠本體	Housing Material	PBT	PA 66
端子	Contact	Copper, Tin Plated	Ag Plated
PCB孔徑	PCB Hole Diameter	1.3mm	1.9mm
環境作業溫度	Operating Temperature	-40˚C to +120˚C	-40˚C to +105˚C

TECHNICAL DATA

連接符合標準 Connection in acc. with standard EN-VDE			
額定電流 I_N	Nominal Current I_N	30A	66A
額定橫截面	Nominal Cross Section	-	-
最大負載電流	Maximum load current	30A	66A
絕緣材料	Insulating Material	PBT	PA
阻燃等級,符合UL94 Inflammability class acc. to UL94		V0	V0
額定電壓,UL/CUL Nominal voltage, UL/CUL		300V	300V
額定電流,UL/CUL Nominal current, UL/CUL		30A	66A

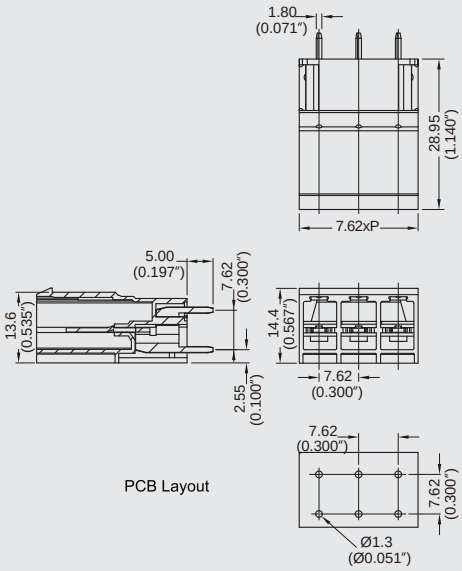

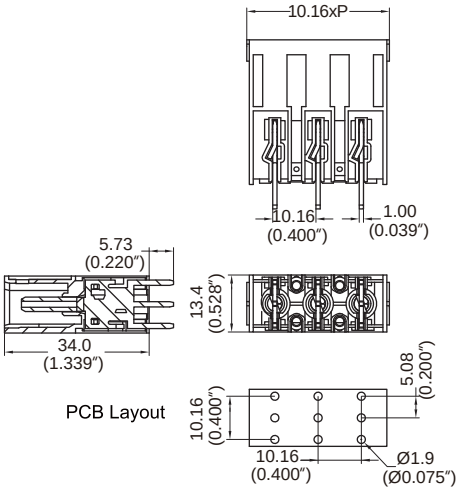

MPE